1965 COMET, FALCON, FAIRLANE and MUSTANG

SHOP MANUAL

1965 Comet, Falcon, Fairlane and Mustang Shop Manual
(Form 7760-65, first printing September 1964)
ISBN 0-9673211-2-3
EAN: 978-0-9673211-2-7

Forel Publishing Company, LLC
3999 Peregrine Ridge Ct.
Woodbridge, VA 22192

Distributed by MustangServiceManual.com

Disclaimer

Although every effort was made to ensure the accuracy of this book, no representations or warranties of any kind are made concerning the accuracy, completeness or suitability of the information, either expressed or implied. As a result, the information contained within this book should be used as general information only. The author and Forel Publishing Company, LLC shall have neither liability nor responsibility to any person or entity with respect to any loss or damage caused, or alleged to be caused, directly or indirectly by the information contained in this book. Further, the publisher and author are not engaged in rendering legal or other professional services. If legal, mechanical, electrical, or other expert assistance is required, the services of a competent professional should be sought.

1965

COMET, FALCON, FAIRLANE and MUSTANG

SHOP MANUAL

SERVICE DEPARTMENT
FORD DIVISION
Ford MOTOR COMPANY

FIRST PRINTING—SEPTEMBER, 1964

GROUP INDEX

SPECIFICATIONS AND SPECIAL SERVICE TOOLS AT END OF EACH GROUP

FOREWORD

This shop manual provides the Service Technician with complete information for the proper servicing of the 1965 Comet, Falcon, Fairlane and Mustang cars.

The information is grouped according to the type of work being performed, such as diagnosis and testing, frequently performed adjustments and repairs, in-vehicle adjustments, overhaul, etc. Specifications and recommended special tools are included.

Refer to the opposite page for important vehicle identification data.

The descriptions and specifications in this manual were in effect at the time this manual was approved for printing. The Ford Motor Company reserves the right to discontinue models at any time, or change specifications or design, without notice and without incurring obligation.

SERVICE DEPARTMENT

FORD MOTOR COMPANY

VEHICLE IDENTIFICATION

GROUP 1

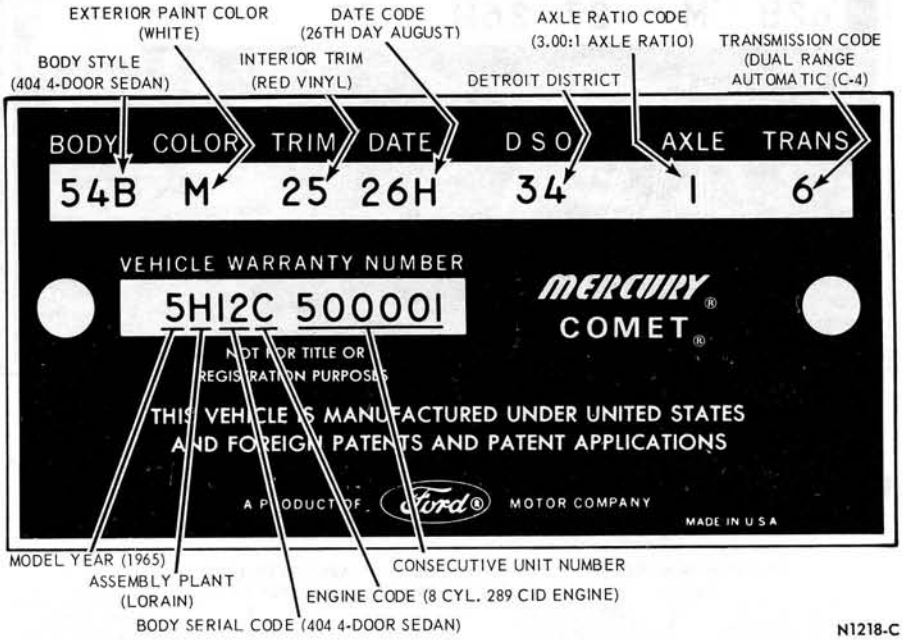

FIG. 1—Comet Warranty Plate

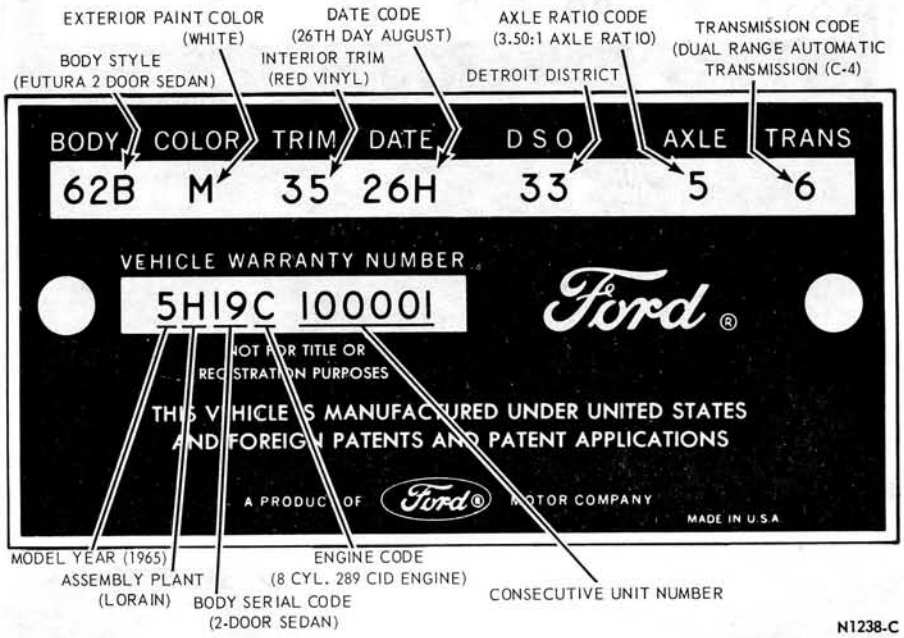

FIG. 2—Falcon Warranty Plate

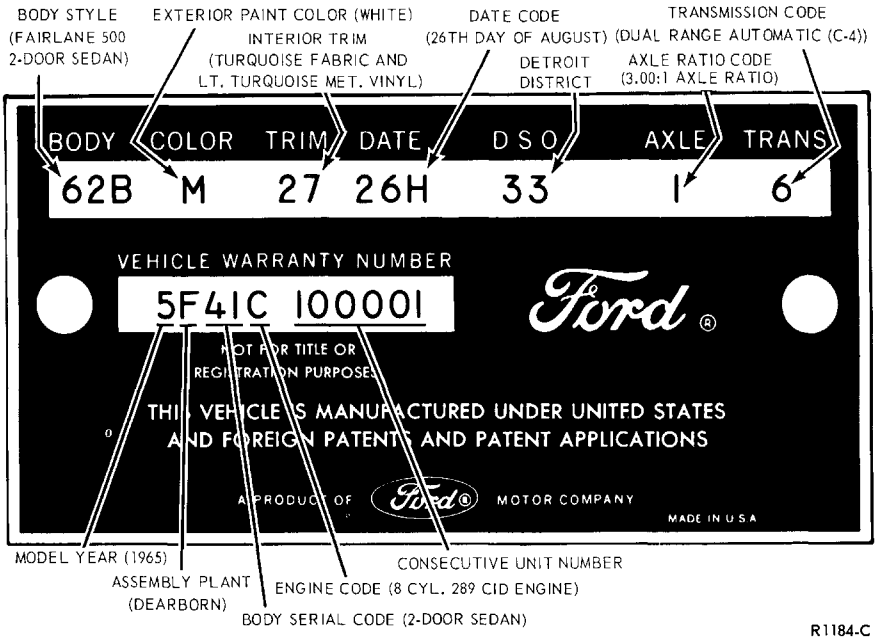

FIG. 3—Fairlane Warranty Plate

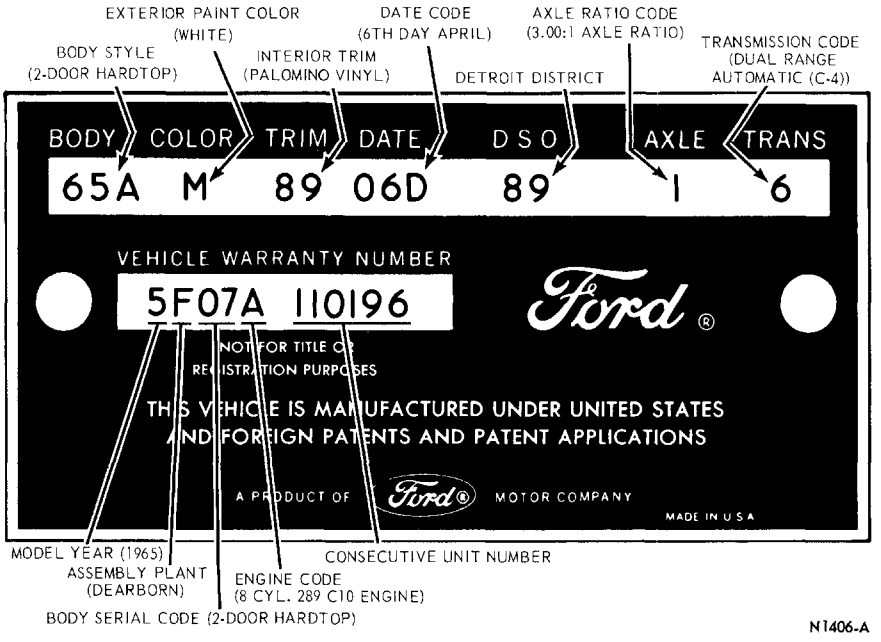

FIG. 4—Mustang Warranty Plate

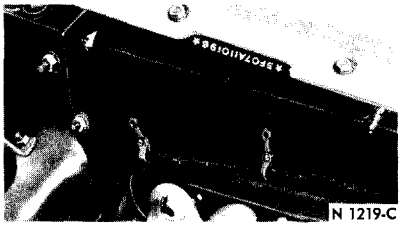

FIG. 5—Vehicle Identification Number Location—Comet, Falcon and Mustang

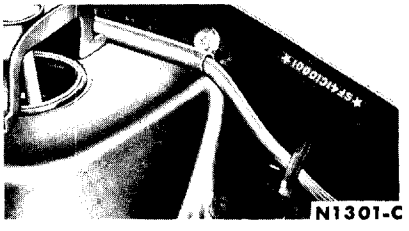

FIG. 6—Vehicle Identification Number Location—Fairlane

Figures 1, 2, 3 and 4 illustrate the Comet, Falcon, Fairlane and Mustang Warranty Plates. The warranty plate is located on the rear face (lock face) of the left front door.

The official Vehicle Identification Number, for title and registration purposes, is stamped on the top upper flange of the left front fender apron for Falcon, Comet and Mustang (Fig. 5C) and on the vertical face of the left front fender apron near the top for the Fairlane (Fig. 6C). Do not use the Vehicle Warranty Number, which appears on the warranty plate, for title or registration purposes.

VEHICLE DATA

The vehicle data appears in a line across the top of the warranty plate (Figs. 1, 2, 3 and 4). The first two letters and a number identify the Body Style. The following one or two letters identify the Exterior Paint Color. The next code consisting of two numbers, or a letter and a number, identifies the Interior Trim. The Date Code showing the date the car was manufactured, follows the Trim Code and consists of two numbers and a letter. The next code gives the district in which the car was ordered and consists of two numbers. The next to the last code is the Axle Ratio Code and is designated by a number for a conventional axle or a letter for an Equa-Lock axle. The last code in the vehicle data is the Transmission Code and consists of one number. The charts that follow, list in detail the various vehicle data codes.

VEHICLE WARRANTY NUMBER

The vehicle warranty number is the second line of numbers and letters appearing on the Warranty Plate (Figs. 1, 2, 3 and 4). The first number indicates the model year. The letter following the model year indicates the assembly plant at which the car was manufactured. The next two numbers designate the Body Serial Code. The letter following the Body Serial Code designates the Engine Code. The remaining numbers indicate the Consecutive Unit Number. The charts that follow, list the various Vehicle Warranty Number codes.

BODY SERIAL AND STYLE CODES

The two-digit numeral which follows the assembly plant code identifies the body series. This two-digit number is used in conjunction with the Body Style Code, in the Vehicle Data, which consists of a two-digit number with a letter Suffix. The following chart lists the Body Serial Codes, Body Style Codes and the Model.

COMET

Body Serial Code	Body Style Code	Body Type	Series
02	54A	4-Door Sedan*	Comet 202
01	62A	2-Door Sedan*	
32	71A	4-Door Wagon*	
12	54B	4-Door Sedan*	Comet 404
11	62B	2-Door Sedan*	
11	62C	2-Door Sedan†	
34	71B	4-Door Wagon*	
36	71C	4-Door (Villager) Wagon*	
22	54C	4-Door Sedan†	Comet Caliente
22	54D	4-Door Sedan*	
23	63C	2-Door Hardtop† (Fastback)	
23	63D	2-Door Hardtop* (Fastback)	
25	76B	2-Door Convertible†	
25	76D	2-Door Convertible*	
23	63E	2-Door Hardtop† (Fastback)	Cyclone

*Bench Seat
†Bucket Seats

FALCON

Body Serial Code	Body Style Code	Body Type	Model
02	54A	4-Door Sedan	Standard Sedan
02	54D	4-Door Sedan (RPO)	
01	62A	2-Door Sedan	
01	62D	2-Door Sedan (RPO)	
16	54B	4-Door Sedan (Bench)	Futura
19	62B	2-Door Sedan (Bench)	
17	63B	2-Door Hardtop (Bench)	
11	63C	2-Door Hardtop (RPO Bucket)	
17	63H	2-Door Hardtop Bucket (Less Console)	
15	76A	Convertible (Bench)	
12	76B	Convertible (RPO Bucket)	
21	59A	2-Door Wagon	Station Wagons
22	71A	4-Door Wagon	
24	71B	4-Door Wagon Deluxe	
26	71C	4-Door Squire	
27	66A	2-Door Standard Ranchero	Ranchero
27	66B	2-Door Deluxe Ranchero	
27	66G	2-Door Standard (RPO Bucket W/Console)	
27	66H	2-Door Standard (RPO Bucket W/Console)	
29	78A	Standard Sedan Delivery	Sedan Delivery
29	78B	Deluxe Sedan Delivery	

FAIRLANE

Body Serial Code	Body Style Code	Body Type	Model
31	62A	2-Door Sedan	Fairlane
32	54A	4-Door Sedan	
41	62B	2-Door Sedan	Fairlane 500
42	54B	4-Door Sedan	
43	65A	2-Door Hardtop	
47	65B	2-Door Hardtop*	Sport Coupe
38	71D	4-Door Ranch Wagon	Station Wagons
48	71B	4-Door Custom Ranch Wagon	

*Bucket Seats

MUSTANG

Body Serial Code	Body Style Code	Body Type	Model
09	63A	2-Door Fastback	Mustang
07	65A	2-Door Hardtop	
08	76A	2-Door Convertible	

EXTERIOR PAINT COLOR CODES

A single letter code designates a solid body color and two letters denote a two-tone—the first letter, the lower color and the second letter, the upper color

Code	M-30J/ M-32-J#	Color
A	1724-A	Black
C	1736-A	Med. Ivy Gold Met.
D	1625-A	Med. Turq. Met.
H	1544-A	Dk. Blue Met.
I	1737-A	Lt. Beige Met.
J	1515-A	Red
K	1621-A	Med. Gray Met.
M	1619-A	White
O	1732-A	Lt. Peacock
P	1738-A	Palomino Met.
R	1879-A	Dk. Ivy Green Met.
V	1729-A	Yellow
X	1632-A	Maroon Met.
Y	1269-A	Med. Blue Met.
5	1731-A	Dk. Turq. Met.

INTERIOR TRIM CODES

Code	Trim Codes
04	Beige Vinyl
12	Med. Blue and Lt. Blue Met. Fabric and Vinyl
15	Red Fabric and Vinyl
16	Black Fabric and Vinyl
17	Med. Turq. and Lt. Turq. Met. Fabric and Vinyl
19	Palomino and Med. Palomino Fabric and Vinyl
22	Med. and Lt. Blue Met. Vinyl (Comet), Fabric and Vinyl (Except Comet)
25	Red Vinyl (Comet), Fabric and Vinyl (Except Comet)
26	Black Vinyl
27	Med. and Lt. Turquoise Met. Vinyl (Comet), Fabric and Vinyl (Except Comet)
28	Ivy Gold and Lt. Ivy Gold D/L Fabric and Vinyl
29	Palomino Vinyl (Comet), Fabric and Vinyl (Except Comet)
32	Med. Blue and Lt. Blue Met. Fabric and Vinyl (Comet) Vinyl (Except Comet)
35	Red Fabric and Vinyl (Comet) Vinyl (Except Comet)
36	Black Fabric and Vinyl (Comet) Vinyl (Except Comet)
37	Med. Turquoise and Lt. Turq. Met. Fabric and Vinyl (Comet) Vinyl (Except Comet)
38	Ivy Gold Fabric and Vinyl (Comet) Vinyl (Except Comet)
39	Palomino and Med. Palomino Fabric and Vinyl (Comet) Vinyl (Except Comet)
42	White and Blue Vinyl
45	White and Red Vinyl
46	White and Black Vinyl
48	White and Ivy Gold Vinyl
49	Med. Palomino Vinyl
52	Med. Blue and Lt. Blue Met. Fabric and Vinyl (Comet), Vinyl (Except Comet)
55	Red Fabric and Vinyl (Comet), Vinyl (Except Comet)
56	Black Fabric and Vinyl (Comet), Vinyl (Except Comet)
59	Palomino and Med. Palomino Fabric and Vinyl (Comet), Vinyl (Except Comet)
F2	White Pearl (W/Red) Fabric and Vinyl
F5	White Pearl (W/Black) Fabric and Vinyl
F6	White Pearl (W/Turquoise) Fabric and Vinyl
F8	White Pearl (W/Gold) Fabric and Vinyl
F9	White Pearl (W/Palomino) Fabric and Vinyl
62	Lt. Blue Met. Vinyl
65	Red Vinyl
66	Black Vinyl
67	Turquoise Vinyl
68	Ivy Gold Met. and D/L Vinyl
69	Med. Palomino Vinyl
G2	White Pearl (W/Blue) Vinyl
G5	White Pearl (W/Red) Vinyl
G6	White Pearl (W/Black) Vinyl
G7	White Pearl (W/Turquoise) Vinyl
G8	White Pearl (W/Gold) Vinyl
G9	White Pearl (W/Palomino) Vinyl
72	Lt. Blue Met. Vinyl
75	Red Vinyl
76	Black Vinyl
77	Lt. Turq. Met. Vinyl
78	Ivy Gold D/L Vinyl
79	Med. Palomino Vinyl
H2	White (W/Blue) Vinyl
H5	White (W/Red) Vinyl
H6	White (W/Black) Vinyl
H7	White (W/Turquoise) Vinyl
H8	White (W/Gold) Vinyl
H9	White (W/Palomino) Vinyl
82	Lt. and Med. Blue Met. Vinyl
85	Red Vinyl
86	Black Vinyl
87	Lt. Turq. Met. Vinyl
88	Lt. Ivy Gold Met. Vinyl
89	Med. Palomino Vinyl
92	Blue Vinyl
95	Red Vinyl
96	Black Vinyl (Except Fairlane) Fabric and Vinyl (Fairlane)
99	Palomino Vinyl (Except Fairlane) Fabric and Vinyl (Fairlane)

DATE CODES

A number signifying the date precedes the month code letter. A second-year code letter will be used if the model exceeds exceeds 12 months.

Month	Code First Year	Code Second Year
January	A	N
February	B	P
March	C	Q
April	D	R
May	E	S
June	F	T
July	G	U
August	H	V
September	J	W
October	K	X
November	L	Y
December	M	Z

DISTRICT CODES (DSO)

Units built on a Domestic Special Order, Foreign Special Order, or other special orders will have the complete order number in this space. Also to appear in this space is the two-digit code number of the District which ordered the unit. If the unit is a regular production unit, only the District code number will appear.

COMET

Code	District	Code	District
11	Boston	34	Detroit
16	Philadelphia	41	Chicago
15	New York	42	St. Louis
14	Washington	45	Twin Cities
21	Atlanta	51	Denver
22	Dallas	52	Los Angeles
23	Jacksonville	53	Oakland
26	Memphis	54	Seattle
31	Buffalo	81	Ford of Canada
32	Cincinnati	84	Home Office Reserve
33	Cleveland	90-99	Export

FALCON, FAIRLANE AND MUSTANG

Code	District	Code	District
11	Boston	45	Davenport
12	Buffalo	51	Denver
13	New York	52	Des Moines
14	Pittsburgh	53	Kansas City
15	Newark	54	Omaha
21	Atlanta	55	St. Louis
22	Charlotte	61	Dallas
23	Philadelphia	62	Houston
24	Jacksonville	63	Memphis
25	Richmond	64	New Orleans
26	Washington	65	Oklahoma City
31	Cincinnati	71	Los Angeles
32	Cleveland	72	San Jose
33	Detroit	73	Salt Lake City
34	Indianapolis	74	Seattle
35	Lansing	81	Ford of Canada
36	Louisville	83	Government
41	Chicago	84	Home Office Reserve
42	Fargo	85	American Red Cross
43	Rockford	89	Transportation Services
44	Twin Cities	90-99	Export

REAR AXLE RATIO CODES

A number designates a conventional axle, while a letter designates an Equa-Lock differential.

Code	Ratio	Code	Ratio
1	3.00:1	A	3.00:1
3	3.20:1	C	3.20:1
4	3.25:1	D	3.25:1
5	3.50:1	E	3.50:1
6	2.80:1	F	2.80:1
7	3.80:1	G	3.80:1
8	3.89:1	H	3.89:1
9	4.11:1	I	4.11:1

TRANSMISSION CODES

Code	Type
1	3-Speed Manual
2	3-Speed Manual W/Overdrive
5	4-Speed Manual
6	Dual Range Automatic (C-4)

MODEL YEAR CODE

The number 5 designates 1965.

ASSEMBLY PLANT CODES

Code Letter	Assembly Plant	Code Letter	Assembly Plant
A	Atlanta	N	Norfolk
D	Dallas	P	Twin Cities
E	Mahwah	R	San Jose
F	Dearborn	S	Pilot Plant
G	Chicago	T	Metuchen
H	Lorain	U	Louisville
J	Los Angeles	W	Wayne
K	Kansas City	Y	Wixom
L	Michigan Truck	Z	St. Louis

ENGINE CODES

A	8 Cyl. 289 Cu. In. (4V Prem.)
C	8 Cyl. 289 Cu. In. (2V)
K	8 Cyl. 289 Cu. In. (4V Hi-Perf.)
T	6 Cyl. 200 Cu. In. (1V)
U	6 Cyl. 170 Cu. In. (1V)
2	6 Cyl. *200 Cu. In. (1V)
3	8 Cyl. *289 Cu. In. (2V)
4	6 Cyl. *170 Cu. In. (1V)

CONSECUTIVE UNIT NUMBER

Each model year, each assembly plant begins production with the number 100001 (Falcon, Fairlane or Mustang) or 500001 (Comet) and continues on for each unit built.

BRAKES

GROUP 2

PART 2-1 GENERAL BRAKE SERVICE

1 DIAGNOSIS AND TESTING

PRELIMINARY TESTS

FLUID LEVEL

Check the fluid in the master cylinder, and add FoMoCo heavy-duty brake fluid.

AUTOMATIC ADJUSTERS

Push the brake pedal down as far as it will go while the car is standing. If the car is equipped with power brakes, the engine should be running while making this test. If the brake pedal travels more than half-way between the released position and the floor, check the automatic adjusters for being inoperative. To check adjuster operation, inspect the brake shoes and the adjuster components for binding or improper installation and follow the procedure described under "Brake Shoe Adjustments" in Part 2-2, Section 2.

Make several reverse stops to ensure uniform adjustment at all wheels.

HYDRAULIC SYSTEM

If the car is equipped with power brakes, shut off the engine and exhaust all vacuum from the booster system before performing this test.

Depress the brake pedal and hold it in the applied position. If the pedal gradually falls away under this pressure, the hydraulic system is leaking. Check all tubing hoses, and connections for leaks.

If the brake pedal movement feels spongy, bleed the hydraulic system to remove air from the lines and cylinder. See "Hydraulic System Bleeding", Section 2. Also, check for leaks or insufficient fluid.

BOOSTER

With the transmission in neutral, stop the engine and apply the parking brake. Depress the service brake pedal several times to exhaust all vacuum in the system. Then, depress the pedal and hold it in the applied position. Start the engine. If the vacuum system is operating, the pedal will tend to fall away under foot pressure and less pressure will be required to hold the pedal in the applied position. If no action is felt, the vacuum booster system is not functioning. Follow the procedures in the "Booster Diagnosis Guide."

For booster removal and installation procedures, refer to Part 2-2, Section 3. For disassembly and assembly procedures, refer to Part 2-2, Section 4. For cleaning and inspection refer to Part 2-1, Section 3.

LOCKED BRAKES

Should one of the brakes be locked and the car must be moved, open the brake cylinder bleeder screw long enough to let out a few drops of brake fluid. **This bleeding operation will release the brakes, but it will not correct the cause of the trouble.**

ROAD TEST

The car should be road tested only if the brakes will safely stop the car. Apply the brakes at a speed of 25-30 mph to check for the existence of the trouble symptoms listed in Table 1, with the exception of those resolved in the preliminary tests and brake chatter. For each of the symptoms encountered, check and eliminate the causes which are also listed in Table 1. To check for brake chatter or surge, apply the brakes lightly from approximately 50 mph.

TABLE 1—Disc Brake Trouble Symptoms and Possible Causes—Mustang 8 Cyl.

Possible Causes of Trouble Symptoms	Trouble Symptoms								
	Excessive Pedal Travel	Brake Roughness or Chatter (Pedal Pumping)	Excessive Pedal Effort	Pull	Rattle	Brakes Heat Up During Driving and Fail to Release	Leaky Wheel Cylinder	Grabbing or Uneven Braking Action	No Braking Effect When Pedal is Depressed
Shoe and Lining Knock-back after violent cornering or rough road travel	X								
Piston and Shoe and Lining Assembly Not Properly Seated or Positioned	X								X
Air Leak or Insufficient Fluid in System or Caliper	X								X
Loose Wheel Bearing Adjustment	X								
Damaged or Worn Caliper Piston Seal	X						X		X
Excessive Lateral Run-out of Rotor		X							
Rotor Excessively Out of Parallel		X							
Frozen or Seized Pistons			X	X		X		X	
Brake Fluid, Oil or Grease on Linings			X	X				X	
Shoe and Lining Worn Below Specifications			X						
Proportioning Valve Malfunction			X					X	
Caliper Out of Alignment with Rotor				X				X	
Loose Caliper Attachment				X				X	
Excessive Clearance Between Shoe and Caliper or Between Shoe and Splash Shield					X				
Shoe Hold-Down Clips Missing or Improperly Positioned					X				
Operator Riding Brake Pedal						X			
Scores in the Cylinder Bore							X		
Corrosion Build-up in the Cylinder Bore or on the Piston Surface							X		
Bleeder Screw Still Open									X
Caliper Out of Parallel with Rotor				X					

BOOSTER DIAGNOSIS GUIDE—FALCON, COMET, MUSTANG

BOOSTER INOPERATIVE—HARD PEDAL	If the preliminary tests show that the booster is inoperative or if a hard pedal condition still exists after eliminating the causes of "Excessive Pedal Effort" or "Hard Pedal" listed in Tables 1 and 2, the trouble may be caused by vacuum leakage. Disconnect the vacuum line at the booster, remove the vacuum manifold and check valve assembly, and look for a sticking or faulty check valve. Check all vacuum connections for leakage or obstruction. Check all hoses for a leaking or collapsed condition. Repair or replace parts as necessary. If the foregoing procedure does not eliminate the trouble, remove the booster from the car. Separate the front shell from the rear shell, and check the valve and rod assembly reaction disc, diaphragm plate, and diaphragm assembly for damage that would cause leaks. When assembling, be sure that the diaphragm assembly is properly positioned. Improper location could cause leakage between the vacuum and atmospheric sides of the diaphragm.

CONTINUED ON NEXT PAGE

TABLE 2—Drum Brake Trouble Symptoms and Possible Causes

Possible Causes of Trouble Symptoms	Trouble Symptoms												
	One Brake Drags	All Brakes Drag	Hard Pedal	Spongy Pedal	Car Pulls to One Side	One Wheel Locks	Brakes Chatter	Excessive Pedal Travel	Pedal Gradually Goes to Floor	Brakes Uneven	Shoe Click Release	Noisy or Grabbing Brakes	Brakes Do Not Apply
Mechanical Resistance at Pedal or Shoes Damaged Linkage		X	X										
Brake Line Restricted	X	X	X		X								
Leaks or Insufficient Fluid				X				X	X				X
Improper Tire Pressure					X					X			
Improperly Adjusted or Worn Wheel Bearing	X				X								
Distorted or Improperly Adjusted Brake Shoe	X	X	X		X	X		X				X	
Faulty Retracting Spring	X				X								
Drum Out of Round	X				X		X						
Linings Glazed or Worn			X		X	X	X	X				X	X
Oil or Grease In Lining			X		X	X	X			X		X	X
Loose Carrier Plate	X					X	X						
Loose Lining					X		X						
Scored Drum										X		X	
Dirt on Drum-Lining Surface												X	
Faulty Wheel Cylinder	X				X	X						X	
Dirty Brake Fluid	X	X								X			X
Faulty Master Cylinder		X						X	X				X
Air in Hydraulic System	X			X				X					X
Self Adjusters Not Operating					X			X			X		
Insufficient Shoe-to-Carrier Plate Lubrication	X										X		
Tire Tread Worn						X							
Poor Lining to Drum Contact							X						
Loose Front Suspension							X						
"Threads" Left by Drum Turning Tool Pull Shoes Sideways											X		
Cracked Drum								X					
Sticking Booster Control Valve		X										X	

BOOSTER DIAGNOSIS GUIDE—FALCON, COMET, MUSTANG (Continued)

BRAKES DRAG OR GRAB	If the brakes still drag or grab after eliminating the causes listed in Tables 1 and 2, the condition is probably caused by a sticking valve plunger assembly. Remove and disassemble the booster. Clean, inspect, and replace parts as necessary.
SELF APPLICATION OF BRAKES WHEN ENGINE STARTS	Remove and disassemble the booster. Check for a leak in the rear shell. Check the diaphragm for being out of locating radii in the housing. Check for a sticking or unseated valve poppet. Clean, inspect, and replace parts as necessary. Be sure that the diaphragm is properly located when assembling.

CONTINUED ON NEXT PAGE

BRAKE BOOSTER TROUBLE DIAGNOSIS GUIDE—FAIRLANE

BOOSTER INOPERATIVE—HARD PEDAL	If the preliminary tests show that the booster is inoperative or if a hard pedal condition still exists after eliminating the causes of "Hard Pedal" listed in Table 2, the trouble may be caused by vacuum leakage. Disconnect the vacuum line (two lines if equipped with an automatic transmission) at the booster, remove the vacuum manifold and check valve assembly, and look for a sticking or faulty check valve. Check all vacuum connections for leakage or obstruction. Check all hoses for a	leaking or collapsed condition. Repair or replace parts as necessary. If the foregoing procedure does not eliminate the trouble, remove the booster from the car. Separate the booster body from the end plate, and check the bellows, booster body, and diaphragm assembly for damage that would cause leaks. When assembling, be sure that the diaphragm assembly is properly positioned. Improper location could cause leakage between the vacuum and atmospheric sides of the diaphragm.
BRAKES DRAG OR GRAB	If the brakes still drag or grab after eliminating the causes listed in Table 1, the condition is probably caused by a sticking valve plunger	assembly. Remove and disassemble the booster. Clean, inspect, and replace parts as necessary.
SELF APPLICATION OF BRAKES WHEN ENGINE STARTS	Remove and disassemble the booster. Check the diaphragm for being out of locating radii in the housing. Check for a sticking or un-	seated atmospheric valve. Clean, inspect, and replace parts as necessary. Be sure that the diaphragm is properly located when assembling.

2 COMMON ADJUSTMENTS AND REPAIRS

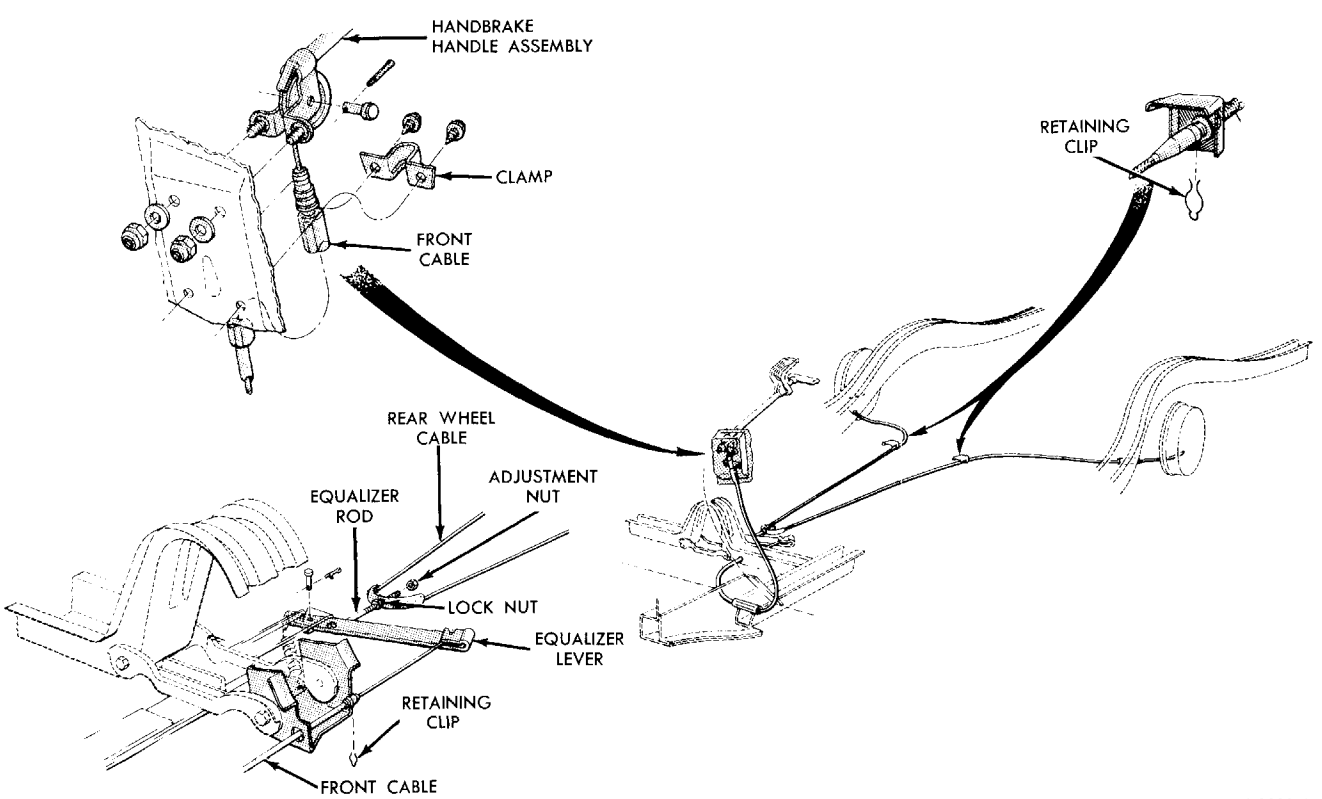

FIG. 1—Parking Brake Linkage

PARKING BRAKE LINKAGE ADJUSTMENT

Check the parking brake cables when the brakes are fully released. If the cables are loose, adjust them as follows:

1. Fully release the parking brake by turning the handle counterclockwise and pushing it inward.
2. Pull the parking brake handle outward to the third notch from its normal released position.
3. Raise the car.
4. On a Falcon, Comet or Fairlane, turn the lock nut in front of the equalizer (Fig. 1) several turns forward.
5. On all cars, turn the adjustment nut forward against the equalizer until a moderate drag is felt when turning the rear wheels in the direction of forward rotation.
6. When the cables are properly adjusted on a Falcon, Comet or Fairlane, tighten the lock nut against the equalizer.
7. Release the parking brake, and make sure that the brake shoes return to the fully released position and no drag is felt when turning the rear wheels.

POWER BRAKE MASTER CYLINDER PUSH ROD ADJUSTMENT—COMET AND MUSTANG

The push rod is provided with an adjustment screw to maintain the correct relationship between the booster control valve plunger and the master cylinder piston. Failure to maintain this relationship will prevent the master cylinder piston from completely releasing hydraulic pressure and can cause the brakes to drag, or cause excessive brake pedal travel.

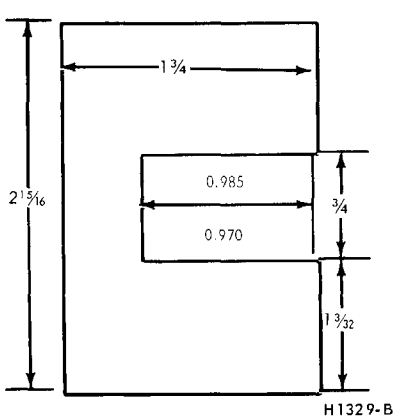

FIG. 2—Push Rod Gauge Dimensions

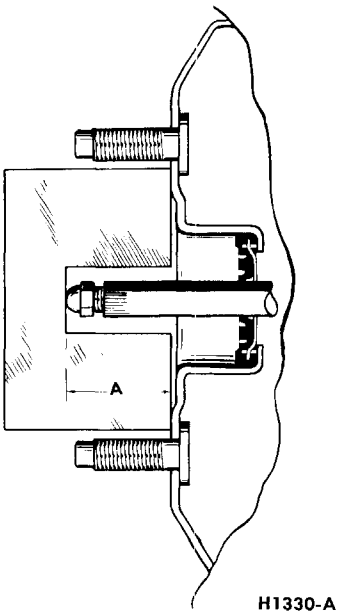

FIG. 3—Push Rod Adjustment

To check the adjustment of the screw, fabricate a gauge of the dimension shown in Fig. 2. Then place the gauge against the master cylinder mounting surface of the booster body as shown in Fig. 3. The push rod screw should be adjusted so that the end of the screw just touches the inner edge of the slot in the gauge. Do not set up side forces on the push rod. Side forces may break the valve plunger.

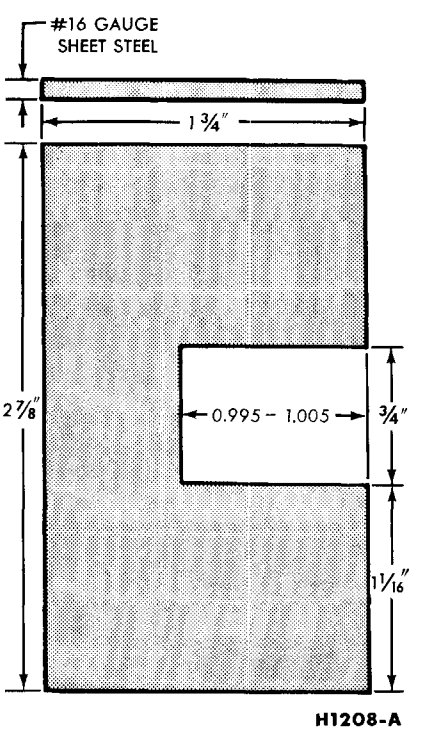

FIG. 4—Push Rod Gauge Dimensions—Fairlane

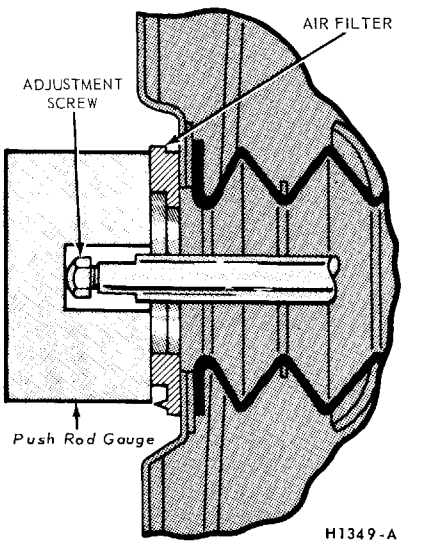

FIG. 5—Push Rod Adjustment —Fairlane

This is an approximate adjustment only. The master cylinder piston should not move more than 0.015 inch as it contacts the push rod. No movement (exact contact) is ideal.

POWER BRAKE MASTER CYLINDER PUSH ROD ADJUSTMENT—FAIRLANE

The push rod is provided with an adjustment screw to maintain the correct relationship between the booster control valve plunger and the master cylinder piston. Failure to maintain this relationship will prevent the master cylinder piston from completely releasing hydraulic pressure and can cause the brakes to drag.

To check the adjustment of the screw, fabricate a gauge of the dimensions shown in Fig. 4. Remove the air filter assembly and push the bellows back into the booster body. Re-install the air filter directly against the booster body, and then place the gauge against the master cylinder mounting surface of the air filter assembly as shown in Fig. 5. The push rod screw should be adjusted so that the end of the screw just touches the inner edge of the slot in the gauge. Do not set up side forces on the push rod as it may break the valve plunger.

This is an approximate adjustment only. To verify the adjustment, look

through the make-up (rear) port when installing the master cylinder to the booster. The master cylinder piston should not move more than 0.015 inch as it contacts the push rod. No movement (exact contact) is ideal.

HYDRAULIC SYSTEM BLEEDING

When any part of the hydraulic system has been disconnected for repair or replacement, air may get into the lines and cause spongy pedal action. Bleed the hydraulic system after it has been properly connected to be sure that all air is expelled from the brake cylinders or disc brake calipers, and lines.

The hydraulic system can be bled manually or with pressure bleeding equipment.

With disc brakes, more pumping of the pedal is required and more frequent checking of the master cylinder may be necessary while bleeding.

On a Mustang with disc brakes, remove the front wheel and tire assemblies in order to gain access to the bleeder fitting on the disc brake calipers.

MANUAL BLEEDING

Bleed the longest lines first. Keep the master cylinder reservoir filled with new SAE 70R3-Wagner 21B (301) brake fluid during the bleeding operation.

Never use brake fluid which has been drained from the hydraulic system.

1. Position a bent ⅜-inch box wrench on the bleeder fitting on the right rear brake wheel cylinder (Fig. 6). Attach a rubber drain tube to the bleeder fitting. **The end of the tube should fit snugly around the bleeder fitting.**

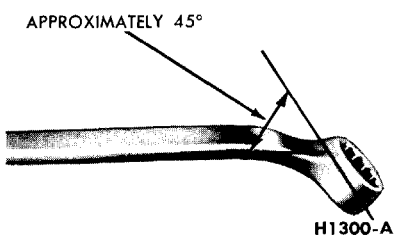

FIG. 6—Brake Bleeder Wrench

2. Submerge the free end of the tube in a container partially filled with clean brake fluid, and loosen the bleeder fitting approximately ¾ turn.

3. Push the brake pedal down slowly through its full travel. Close the bleeder fitting, then return the pedal to the fully-released position. Repeat this operation until air bubbles cease to appear at the submerged end of the tube.

4. When the fluid is completely free of air bubbles, close the bleeder fitting and remove the drain tube.

5. Repeat this procedure on the brake cylinders or disc calipers at each wheel in order: left rear, right front, and left front. Refill the master cylinder reservoir after each brake cylinder is bled and when the bleeding operation is completed. The fluid level should be within ⅜ inch of the top of the reservoir. The diaphragm-type gasket should be properly positioned in the reservoir cap before the cap is installed.

6. On a Mustang with disc brakes, be sure that the front brake pistons are returned to their normal positions and that the shoe and lining assemblies are properly seated.

7. Before driving the car, check the operation of the brakes and be sure that a firm pedal is obtained.

PRESSURE BLEEDING

Bleed the longest lines first. **Never use brake fluid which has been drained from the hydraulic system.**

The bleeder tank should contain enough new heavy-duty brake fluid to complete the bleeding operation, and it should be charged with 10-30 pounds of air pressure.

1. Clean all dirt from the master cylinder reservoir cap.

2. Remove the master cylinder reservoir cap, install an adapter cap to the reservoir, and attach the bleeder tank hose to the fitting on the adapter cap.

An adapter cap can be fabricated by cutting a hole in the center of a reservoir cap and soldering a fitting at the hole. The adapter cap must be securely seated and completely sealed on the master cylinder or leakage will occur.

3. Position a ⅜-inch box wrench on the bleeder fitting on the right rear brake wheel cylinder (Fig. 6). Attach a rubber drain tube to the bleeder fitting. **The end of the tube should fit snugly around the bleeder fitting.**

4. Open the valve on the bleeder tank to admit pressurized brake fluid to the master cylinder reservoir.

5. Submerge the free end of the tube in a container partially filled with clean brake fluid, and loosen the bleeder fitting.

6. When air bubbles cease to appear in the fluid at the submerged end of the drain tube, close the bleeder fitting and remove the tube.

7. Repeat this procedure on the brake cylinder or disc caliper at each wheel in order: left rear, right front, and left front. Refill the master cylinder reservoir after each brake cylinder is bled.

8. When the bleeding operation is completed, close the bleeder tank valve and remove the tank hose from the adapter fitting.

9. Remove the adapter cap, refill the master cylinder reservoir to within ⅜-inch from the top of the reservoir. Be sure that the diaphragm-type gasket is properly positioned in the reservoir cap, and then install the cap.

10. On a Mustang with disc brakes, be sure that the front brake pistons are returned to their normal positions and that the shoe and lining assemblies are properly seated.

11. Before driving the car, check the operation of the brakes and be sure that a firm pedal is obtained.

3 CLEANING AND INSPECTION

DISC BRAKES

1. Remove the wheel and tire assembly, caliper splash shield, and the shoe and lining assemblies as outlined in Part 2-2, Section 2.

2. Make three thickness measurements with a micrometer across the middle section of the shoe and lining. Take one reading at each side and one in the center. If the assembly has worn to a thickness of 0.195-inch (shoe and lining together) or 0.030 -inch (lining material only) at any one of the three measuring locations, replace all (4) shoe and lining assemblies on both front wheels.

3. With the shoe and lining assem-

blies installed, insert a feeler gauge between the lining and rotor. If the clearance is not within 0.002-0.010-inch, check for shoe and lining assemblies not being properly seated on the caliper bridges, for a piston pushed back in the cylinder bore, for a seized piston, or for malfunction of a piston seal.

Ordinarily, the clearance should be 0.002-0.010-inch. However, if the vehicle was stopped by a brake application just prior to checking the clearance, the brakes may drag slightly.

4. To check rotor runout, first eliminate the wheel bearing end play by tightening the adjusting nut. After tightening the nut check to see that the rotor can still be rotated.

5. Clamp a dial indicator to the caliper housing so that the stylus contacts the rotor at a point approximately 1-inch from the outer edge. Rotate the rotor and take an indicator reading. If the reading exceeds 0.002-inch total indicator runout, replace the rotor. **Do not attempt to refinish a rotor that indicates runout in excess of specification.** When the runout check is finished be sure to adjust the bearings as outlined in Group 3, in order to prevent bearing failure.

6. Check the rotor for scoring. Minor scores can be removed with a fine emery cloth. If the rotor is excessively scored, replace it.

7. Visually check the caliper. If it is cracked or if excess leakage is evident, it should be replaced. Slight leakage or seized pistons indicate removal and disassembly.

8. If upon disassembly the caliper is found to be distorted or damaged, or if the cylinder bores are scored or excessively worn, replace the assembly.

The two halves of the caliper assembly should never be separated. Damage or failure of one requires replacement of both as a unit.

DRUM BRAKES

1. Remove the wheel from the drum, and remove the drum as outlined in Part 2-2, Section 2. Wash all the parts except the brake shoes in a cleaning fluid and dry with compressed air.

2. Brush all dust from the carrier plate and interior of the brake drum.

3. Inspect the brake shoes for excessive lining wear or shoe damage. If the lining is worn to within 1/32-inch of the rivet heads or if the shoes are damaged, they must be replaced. Replace any lining that has been oil saturated. Replace the lining in axle sets. Prior to replacement of the lining, the drum diameter should be checked to determine if oversize linings must be installed.

4. Check the condition of the brake shoes, retracting springs, and drum for signs of overheating. If the shoes have a slight blue coloring, or if the springs show a change in free length, indicating overheating, replacement of the retracting and hold down springs is necessary. **Overheated springs lose their pull and could cause the new lining to wear prematurely if they are not replaced.**

5. If the car has 30,000 or more miles of operation on the brake linings, or signs of overheating are present when relining brakes, the wheel cylinders should be disassembled and inspected for wear and dirt in the cylinder. The cylinder cups and other parts contained in the overhaul kit should be replaced, thus avoiding future problems.

6. Inspect all other brake parts and replace any that are worn or damaged.

7. Inspect the brake drums and, if necessary, refinish. Refer to Part 2-2, Section 4 for refinishing.

BOOSTER UNIT—COMET

A disassembled view of the brake booster is shown in Fig. 41, Part 2-2.

After disassembly, immerse all metal parts in cleaning solvent. Clean the plastic parts in alcohol **only,** taking care to avoid chipping or damage. Replace all rubber parts. Use an air hose to blow out dirt and cleaning solvent from recesses and internal passages. When overhauling a vacuum booster, use all parts furnished in the repair kit.

BOOSTER UNIT—FAIRLANE

A disassembled view of the brake booster is shown in Fig. 50, Part 2-2.

After disassembly, immerse all metal parts in a suitable solvent. Use only alcohol on rubber parts or parts containing rubber. After the parts have been thoroughly cleaned and rinsed in cleaning solvent, the metal parts which come in contact with hydraulic brake fluid or rubber parts should be rewashed in clean alcohol before assembly. Use an air hose to blow dirt and cleaning fluid from the recesses and internal passages. When overhauling a power booster, use all parts furnished in the repair kit. **Discard all old rubber parts.**

Inspect all other parts for damage or excessive wear. Replace damaged or excessively worn parts. If the inside of the booster body is rusted or corroded, polish it with steel wool or fine emery cloth.

PART 2-2 BRAKE SYSTEM

1 DESCRIPTION AND OPERATION

Disc brakes are available as optional equipment for the front wheels on Mustang 8-cylinder cars. The hydraulic brake system employs single anchor, internal expanding and self-adjusting drum brake assemblies on the rear wheels of cars with disc brakes, and of front and rear wheels of all others.

A vacuum booster is available as optional equipment on Comet and Mustang models with an automatic transmission and on all Fairlane models.

A booster unit is not available on Mustang models equipped with disc brakes.

The master cylinder converts physical force from the brake pedal (and booster if so equipped) into hydraulic pressure against the pistons in the calipers (disc brakes) or in the wheel cylinders (drum brakes). The pistons in turn convert hydraulic pressure back into physical force at the brake shoes.

SELF ADJUSTING DRUM BRAKE ASSEMBLIES

The self-adjusting brake mechanism consists of a cable, cable guide, adjusting lever, and adjuster spring (Fig. 1 and 2). The cable is hooked over the anchor pin at the top and is connected to the lever at the bottom. The cable is connected to the secondary brake shoe by means of the cable guide. The adjuster spring is hooked to the primary brake shoe and to the lever. The automatic adjuster operates only when the brakes are applied while the car is moving rearward and only when the secondary shoe is free to move toward the drum beyond a predetermined point.

With the car moving rearward and the brakes applied, the "wrap-around" action of the shoes following the drum forces the upper end of the primary shoe against the anchor pin. The action of the wheel cylinder moves the upper end of the secondary shoe away from the anchor pin. The movement of the secondary shoe causes the cable to pull the adjusting lever upward and against the end of a tooth on the adjusting screw star-wheel. The upward travel of the lever increases as lining wear increases. When the lever can move upward far enough, it passes over the end of the tooth and engages the tooth. When the brakes are released, the adjusting spring pulls the lever downward causing the star-wheel to turn and expand the shoes. The star-wheel is turned one tooth at a time as the linings progressively wear.

With the car moving forward and the brakes applied, the secondary shoe is against the anchor pin and the primary shoe is moved toward the drum. Therefore, the adjuster does not operate.

The rear brake assembly is basically the same as the front brake. The conventional parking brake lever, link, and spring are used in the rear brake.

The anchor pins on all brakes are fixed and are non-adjustable.

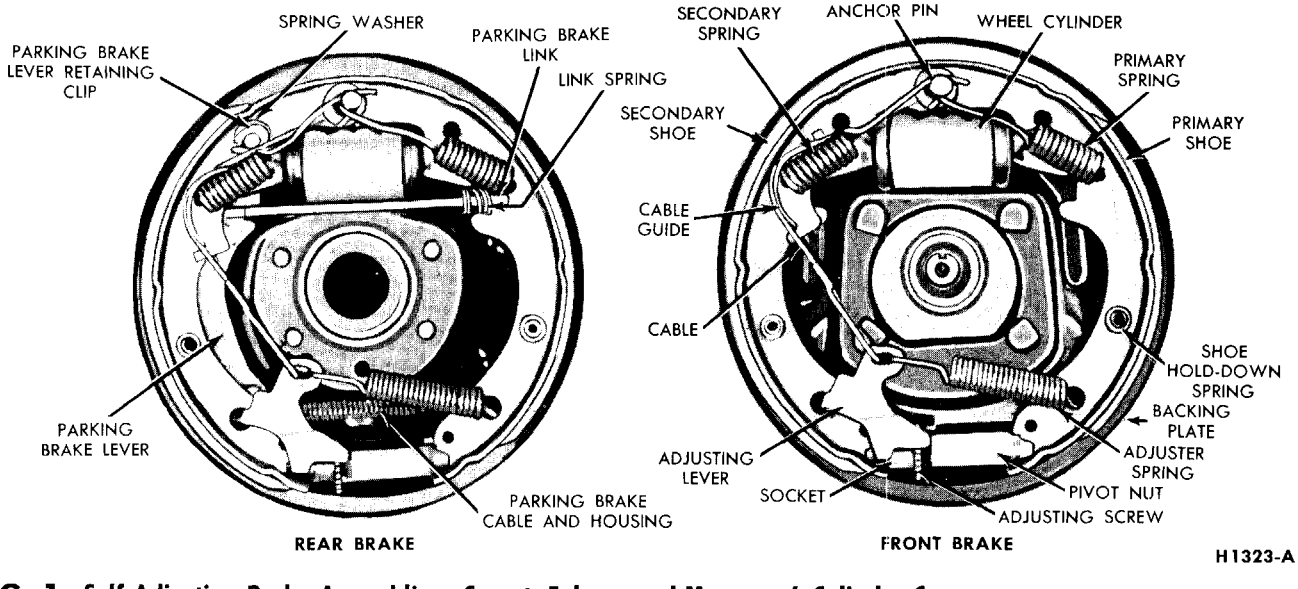

FIG. 1—Self Adjusting Brake Assemblies—Comet, Falcon, and Mustang 6-Cylinder Cars

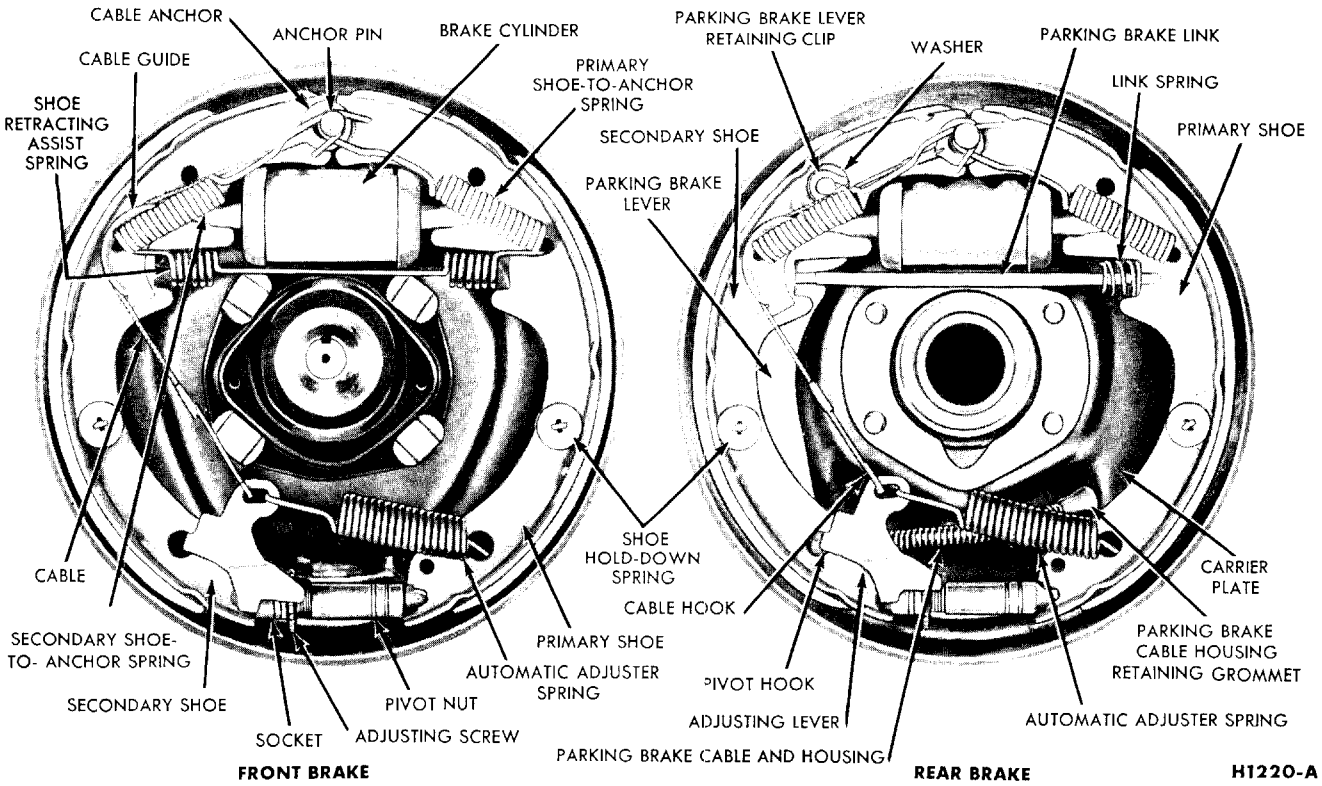

FIG. 2—Self Adjusting Brake Assemblies—All Fairlane & Falcon, Comet & Mustang—8-Cylinder Cars

DISC BRAKE ASSEMBLIES

RELATION AND FUNCTION OF COMPONENT PARTS

The disc brake is a fixed caliper, opposed piston, non-energized, ventilated disc type, actuated by a hydraulic system (Fig. 3). There is no lateral movement of either the disc (rotor) or the caliper. The caliper assembly consists of two caliper housings bolted together with each half containing two cylinder bores of 1-15/16" diameter. Each cylinder bore contains a piston with an attached molded rubber dust boot to seal the cylinder bore from contamination. (Fig. 4). Square-section rubber piston seals are positioned in grooves in the cylinder bores.

The piston seals perform three important tasks:

1. They provide hydraulic sealing between the cylinders and pistons.

2. They return the pistons to released position, when hydraulic pressure is released.

3. They maintain the shoes in correct adjustment at all times (comparable to the automatic adjusters in drum-type brakes).

The cylinders are connected hydraulically by means of internal passages in the caliper housing and an external transfer tube between the two halves of the caliper assembly. One bleeder screw and fluid inlet fitting is provided on each caliper assembly.

The shoe and lining assemblies are located in between parallel machined abutments within the caliper, and are supported radially by tabs on the outer ends of the shoe assemblies (Fig. 36). The shoes slide axially in the caliper abutments by means of the tabs which ride on machined ledges (bridges) when hydraulic pressure is applied to the piston (Fig. 18). A shoe and lining assembly consists of friction material bonded to a metal plate called the shoe. It is replaced as a unit. Brake torque is absorbed by the mating of the shoe end against the caliper abutments (Fig. 36). A splash shield is attached to the top of the caliper to retain the shoe and lining assemblies and reduce contamination. The caliper assembly is mounted to a bracket located between the spindle and rotor splash shield, to the front of the wheel vertical centerline.

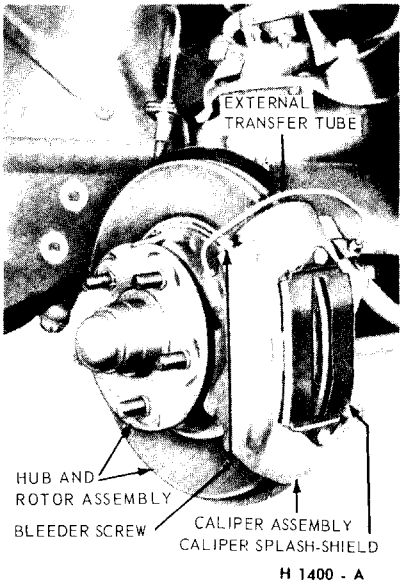

FIG. 3—Mustang Disc Brake Assembly

The cast iron disc is of the ventilated rotor type incorporating forty fins and is staked to, and rotates with, the wheel hub. The outside diameter of the rotor is 11.375 inches and the inside diameter is 7.375 inches. This type of design increases cooling area and permits circulation of air through the rotor resulting in more rapid cooling of the brake. A splash shield bolted to the spindle is used primarily to pre-