1968 Colorized Mustang Wiring & Vacuum Diagrams

(with Electrical Illustrations)

Free Bonus!

BUY NOW CLICKBANK®

A consolidated collection of original Ford electrical & vacuum diagrams with illustrations

Color diagrams for:

- Air Conditioner
- Convenience Control Group
- Exterior Lighting and Turn Signals
- Heater-Defroster
- Horns
- Ignition, Starting and Charging
- Instrument Panel
- Interior Lighting
- Pre-Wired Instrument Cluster
- Radio, Stereo and Speakers
- Speed Control

...and much more!!

Licensed and approved by the Ford Motor Company

Official Licensed Product

5236

All Rights Reserved. Copyright 2008
Forel Publishing Company, LLC

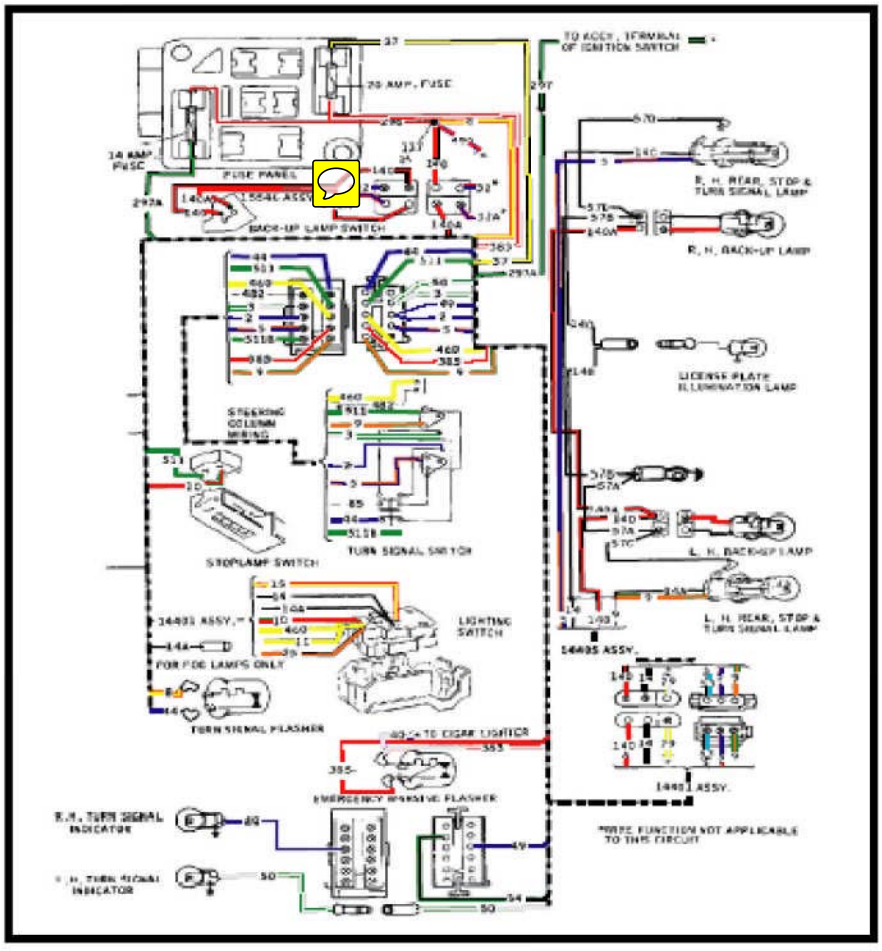

Example of colorized diagrams

Copyright © 2008, Forel Publishing Company, LLC, Woodbridge, Virginia

All Rights Reserved. No part of this book may be used or reproduced in any manner whatsoever without written permission of Forel Publishing Company, LLC. For information write to Forel Publishing Company, LLC, 3999 Peregrine Ridge Ct., Woodbridge, VA 22192

1968 Ford Mustang Wiring and Vacuum Diagrams
(Extracted from Form 7760-68, Form FD-7795P-68, FD-7943-68, FP-7635B, and FD-7943-G)
EAN: 978-1-60371-027-5
ISBN: 1-60371-027-2

Forel Publishing Company, LLC
3999 Peregrine Ridge Ct.
Woodbridge, VA 22192

Marketed by MustangServiceManual.com

This publication contains material that is reproduced and distributed under a license from Ford Motor Company. No further reproduction or distribution of the Ford Motor Company material is allowed without the express written permission of Ford Motor Company.

Note from the Editor

This product was compiled using several original Ford Motor Company publications. In some cases, there are slight differences between publications, so it is important to compare between diagrams, schematics, or illustrations. The contents of this product were extracted from: *1968 Cougar, Fairlane, Falcon, Mercury and Mustang Shop Manual* (Form 7760-68, March 1968), *1965/1972 Ford Car Master Parts and Accessory Catalog* (Form FP-7635B, May 1975, and *1968 Wiring Diagrams* (Form FD-7795P-67 & FD-7943-67) and *How to Read Wiring Diagrams* (FD-7943-G).

Disclaimer

Although every effort was made to ensure the accuracy of this book, no representations or warranties of any kind are made concerning the accuracy, completeness or suitability of the information, either expressed or implied. As a result, the information contained within this book should be used as general information only. The author and Forel Publishing Company, LLC shall have neither liability nor responsibility to any person or entity with respect to any loss or damage caused, or alleged to be caused, directly or indirectly by the information contained in this book. Further, the publisher and author are not engaged in rendering legal or other professional services. If legal, mechanical, electrical, or other expert assistance is required, the services of a competent professional should be sought.

ATTENTION

Please Read This

It is important to note that differences exist between similar or like wiring diagrams even though they are original Ford publications. It is for this reason there may be multiple versions of what appears to be the same wiring diagram. If your vehicle has a color coded wire that does not match a diagram you should consult the other diagrams contained in the manual for a possible match.

Example of differences

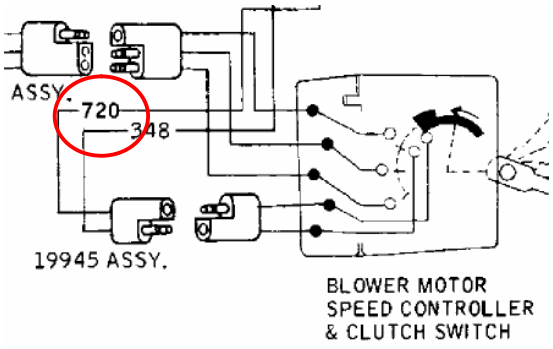

In the schematic from the Ford publication Form 7760-68, an Air Conditioner wire is designated as:
720 - Violet

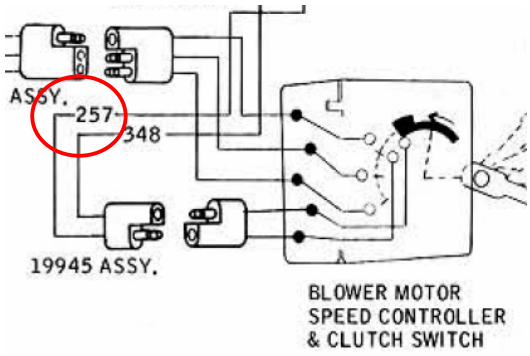

In the diagram from the Ford publication Form FD-7795P-68, an Air Conditioner wire is designated as:
257 - Yellow

The color coded wiring diagrams are provided for illustration purposes only. Only the wire number should be used for the identification of the wire itself. The color coding of the wires in the product may not match the actual colors of the wires in the vehicle. In some cases, the colors have been altered to provide a visual contrast (i.e. the color white has been shaded to make it more visible). As stated in the paragraph above, there are some variation and/or differences between the original Ford wiring diagrams. If your vehicle has a color coded wire that does not match a diagram you should consult the other diagrams contained in the manual for a possible match.

Disclaimer: Although every effort was made to ensure the accuracy of this book, no representations or warranties of any kind are made concerning the accuracy, completeness or suitability of the information, either expressed or implied. As a result, the information contained within this book should be used as general information only. The author and Forel Publishing Company, LLC shall have neither liability nor responsibility to any person or entity with respect to any loss or damage caused, or alleged to be caused, directly or indirectly by the information contained in this book. Further, the publisher and author are not engaged in rendering legal or other professional services. If legal, mechanical, electrical, or other expert assistance is required, the services of a competent professional should be sought.

1968 Color Wiring Codes

Number	Wire Description	Source
2	WHITE-BLUE STRIPE	Form 7760-68*
2A	WHITE-BLUE STRIPE	FD-7795P-68
3	GREEN-WHITE STRIPE	Form 7760-68*
3A	GREEN-WHITE STRIPE	Form 7760-68
5	ORANGE-BLUE STRIPE	Form 7760-68
8	ORANGE-YELLOW STRIPE	Form 7760-68
9	GREEN-ORANGE STRIPE	Form 7760-68
10	GREEN-RED STRIPE	Form 7760-68*
11	BLACK-YELLOW STRIPE	FD-7795P-68
11A	BLACK-YELLOW STRIPE	FD-7795P-68
12	GREEN-BLACK STRIPE	FD-7795P-68
12A	GREEN-BLACK STRIPE	FD-7795P-68
13	RED-BLACK STRIPE	FD-7795P-68
13A	RED-BLACK STRIPE	FD-7795P-68
14	BLACK	FD-7795P-68
14A	BLACK	FD-7795P-68
14B	BLACK	FD-7795P-68
14C	BLACK	FD-7795P-68
15	RED-YELLOW STRIPE	FD-7795P-68
16	RED-GREEN STRIPE	Form 7760-68*
16A	**RED-GREEN STRIPE**	Form 7760-68*
16A	**PINK**	Form 7760-68*
16B	RED-GREEN STRIPE	Form 7760-68*
19	BLUE-RED STRIPE	Form 7760-68*
19A	BLUE-RED STRIPE	Form 7760-68*
19B	BLUE-RED STRIPE	Form 7760-68*
19C	BLUE-RED STRIPE	Form 7760-68*
19D	BLUE-RED STRIPE	Form 7760-68*
19E	BLUE-RED STRIPE	Form 7760-68*
19F	BLUE-RED STRIPE	Form 7760-68*
19G	BLUE-RED STRIPE	Form 7760-68*
21	YELLOW	Form 7760-68*
22	BLUE-BLACK STRIPE	Form 7760-68*
25	BLACK-ORANGE STRIPE	Form 7760-68*
26	**BLACK-RED STRIPE**	Form 7760-68*
26	**BLACK**	Form 7760-68*
26A	BLACK	Form 7760-68*
28	BLACK	Form 7760-68*
28A	BLACK	Form 7760-68*
29	YELLOW-WHITE STRIPE	Form 7760-68*
30	BLACK-GREEN STRIPE	Form 7760-68*

Number	Wire Description	Source
31	**WHITE-RED STRIPE**	Form 7760-68*
31	**WHITE-BLUE STRIPE**	Form 7760-68*
32	RED-BLUE STRIPE	Form 7760-68*
32A	RED-BLUE STRIPE	Form 7760-68*
34	GREEN-BLACK STRIPE	Form 7760-68*
37	BLACK-YELLOW STRIPE	Form 7760-68*
37A	BLACK-YELLOW STRIPE	Form 7760-68*
37B	BLACK-YELLOW STRIPE	Form 7760-68*
38	BLACK	Form 7760-68*
38A	BLACK	Form 7760-68*
39	RED-WHITE STRIPE	Form 7760-68*
40	BLUE-WHITE STRIPE	Form 7760-68*
44	BLUE	FD-7795P-68
47	BLACK	Form 7760-68*
49	WHITE-BLUE STRIPE	Form 7760-68*
50	GREEN-WHITE STRIPE	Form 7760-68*
53	BLACK-BLUE STRIPE	Form 7760-68*
53A	BLACK-BLUE STRIPE	Form 7760-68*
53B	BLACK-BLUE STRIPE	Form 7760-68*
53C	BLACK-BLUE STRIPE	Form 7760-68*
53D	BLACK-BLUE STRIPE	Form 7760-68*
53E	BLACK-BLUE STRIPE	Form 7760-68*
54	GREEN-YELLOW STRIPE	Form 7760-68*
54A	GREEN-YELLOW STRIPE	Form 7760-68*
54B	GREEN-YELLOW STRIPE	Form 7760-68*
54C	GREEN-YELLOW STRIPE	Form 7760-68*
54D	GREEN-YELLOW STRIPE	Form 7760-68*
54E	GREEN-YELLOW STRIPE	Form 7760-68*
56	BLUE	Form 7760-68*
57	BLACK	Form 7760-68*
57A	BLACK	Form 7760-68*
57B	BLACK	FD-7795P-68
57C	BLACK	FD-7795P-68
57D	BLACK	FD-7795P-68
58	WHITE	Form 7760-68*
58A	WHITE	Form 7760-68*
60A	BLACK-WHITE STRIPE	Form 7760-68*
60B	BLACK-WHITE STRIPE	Form 7760-68*
63	RED	Form 7760-68*
63A	RED	Form 7760-68*
87	GREEN-ORANGE STRIPE	Form 7760-68*

Number	Wire Description	Source
122	YELLOW	Form 7760-68*
123	RED	Form 7760-68*
137	YELLOW-BLACK STRIPE	Form 7760-68*
140	BLACK-RED STRIPE	Form 7760-68*
140A	BLACK-RED STRIPE	Form 7760-68*
152	YELLOW	Form 7760-68*
152A	YELLOW	Form 7760-68*
162	GREEN-RED STRIPE	Form 7760-68*
163	RED-GREEN STRIPE	Form 7760-68*
175	BLACK	Form 7760-68*
181	BROWN	Form 7760-68*
186	BROWN	Form 7760-68*
215	YELLOW-BLACK STRIPE	Form 7760-68*
257	YELLOW	Form 7760-68*
260	RED-BLACK STRIPE	Form 7760-68*
260A	VIOLET	Form 7760-68*
262	BROWN	Form 7760-68*
268	RED	Form 7760-68*
269	BLUE	Form 7760-68*
270	BLACK-YELLOW STRIPE	Form 7760-68*
296	RED	Form 7760-68*
297	**BLACK-GREEN STRIPE**	Form 7760-68*
297	**BLUE-GREEN STRIPE**	Form 7760-68*
297A	**BLACK-GREEN STRIPE**	Form 7760-68*
297A	**BLUE-GREEN STRIPE**	Form 7760-68*
348	GREEN	Form 7760-68
365	BLUE-RED STRIPE	Form 7760-68*
365A	BLUE-RED STRIPE	Form 7760-68*
365B	BLUE-RED STRIPE	Form 7760-68*
365C	BLUE-RED STRIPE	Form 7760-68*
366	RED	Form 7760-68*
367	GREEN-WHITE STRIPE	Form 7760-68*
375	**UNKNOWN**	Form 7760-68*
383	RED-WHITE STRIPE	Form 7760-68*
385	WHITE-RED STRIPE	Form 7760-68*
450	GREEN	Form 7760-68*
450A	GREEN	Form 7760-68*
460	YELLOW	Form 7760-68*
482	BLUE-YELLOW STRIPE	Form 7760-68*
475	**UNKNOWN**	Form 7760-68*
477	**UNKNOWN**	Form 7760-68*

Number	Wire Description	Source
482A	BLUE-YELLOW STRIPE	Form 7760-68*
485	BROWN	Form 7760-68*
490	**BLUE-RED STRIPE**	Form 7760-68*
490	**BLACK-RED STRIPE**	Form 7760-68*
511	GREEN	Form 7760-68*
520	VIOLET	Form 7760-68*
591	BLACK-ORANGE STRIPE	Form 7760-68*
592	BLUE-WHITE STRIPE	Form 7760-68*
615A	BLACK	Form 7760-68*
627	BLACK-VIOLET STRIPE	Form 7760-68*
627A	BLACK-VIOLET STRIPE	Form 7760-68*
640	RED-YELLOW STRIPE	Form 7760-68*
654	VIOLET	Form 7760-68*
654	YELLOW	Form 7760-68*
655	YELLOW	Form 7760-68*
655	RED	Form 7760-68*
763	**ORANGE-WHITE STRIPE**	Form 7760-68*
763	**ORANGE**	Form 7760-68*
806	WHITE	Form 7760-68*
807	ORANGE	Form 7760-68*
904	GREEN-RED STRIPE	Form 7760-68*
913	YELLOW	Form 7760-68*
914	GREEN	Form 7760-68*
923	VIOLET	Form 7760-68*
925	WHITE	Form 7760-68*
931	BLACK	Form 7760-68*
977	RED	Form 7760-68*
984	BROWN	Form 7760-68*
984A	BROWN	FD-7795P-68
997	**UNKNOWN**	Form 7760-68

* Indicates that wire colors are the same in both Form 7760-68 and FD-7795P-68.

Note – wire color codes highlighted in **RED** designate a difference either between the original Ford wiring publications or within the same publication. Those highlighted have the same wire number but have different color codes.

CIRCUIT SYMBOLS

HEATER

CIRCUIT BREAKER

FUSE

RESISTOR OR RESISTANCE WIRE

DIODE

CAPACITOR OR CONDENSER

RHEOSTAT (VARIABLE RESISTANCE)

THERMISTOR

SPARK PLUG

GROUND

BATTERY

MAINTAINED CONTACT

MOMENTARY CONTACT

SPLICE, WELD OR SOLDER POINT

SPLICED WIRES

CROSSOVER WIRE (NO CONNECTION)

JUNCTION BLOCK

HORN

BUSS BAR

BUS BAR & SPLICE

SWITCHES

N.O. (SPST)

N.O. (SPST)

N.O. (DPST)

PUSH TYPE N.C.

PUSH TYPE N.O.

PUSH TYPE N.O. MULTIPLE POLE

PRESSURE OR VACUUM OPERATED N.C.

(SPDT) CENTER OFF

ROTARY SWITCH

MERCURY SWITCH

THERMAL SWITCH INTERNAL HEATER N.C

THERMAL SWITCH INTERNAL HEATER N.C.

THERMAL SWITCH EXTERNAL HEATER N.C.

N.O. - NORMALLY OPEN
N.C. - NORMALLY CLOSED
S.P.S.T. - SINGLE POLE, SINGLE THROW
D.P.S.T. - DOUBLE POLE, SINGLE THROW
S.P.D.T. - SINGLE POLE, DOUBLE THROW
D.P.D.T. - DOUBLE POLE, DOUBLE THROW

RELAYS

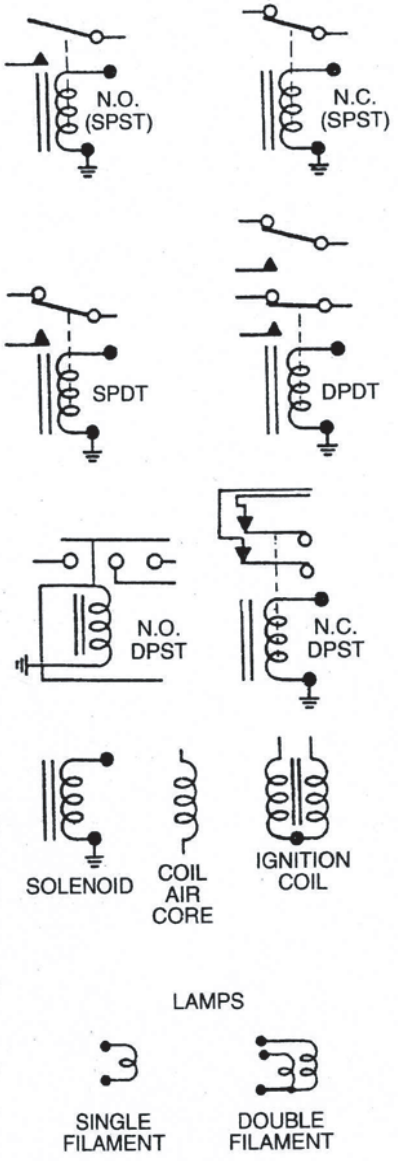

MOTORS

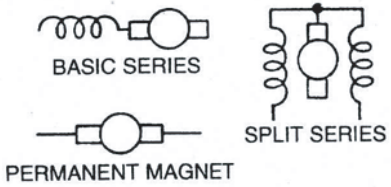

CONNECTORS

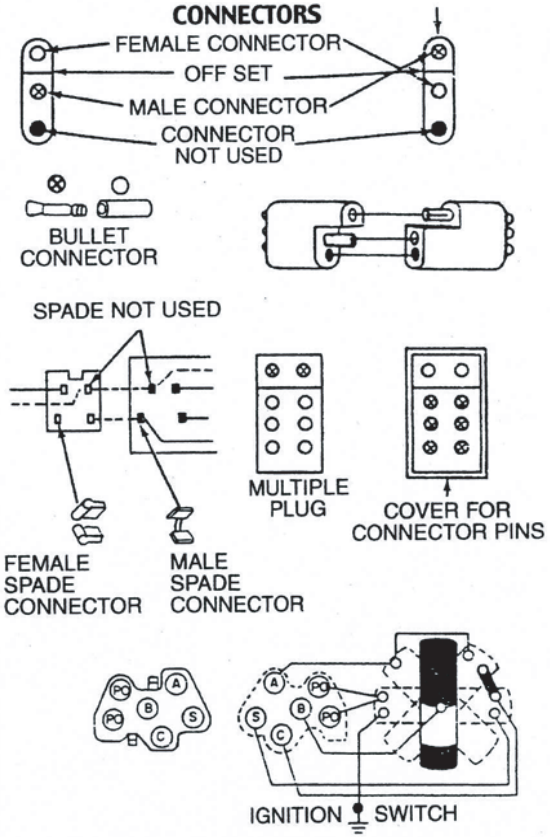

~ AND/OR * WIRE FUNCTION NOT APPLICABLE TO THIS CIRCUIT
(14), (16) ETC. ALL NUMBERS IN Ⓐ Ⓑ ETC. ALL LETTERS CIRCLED INDICATE CONNECTION LOCATION.
★ TO POWER SOURCE

1968
COUGAR
FAIRLANE
FALCON
MONTEGO
MUSTANG

Source Document
Ford Publication Form 7760-68

SHOP MANUAL

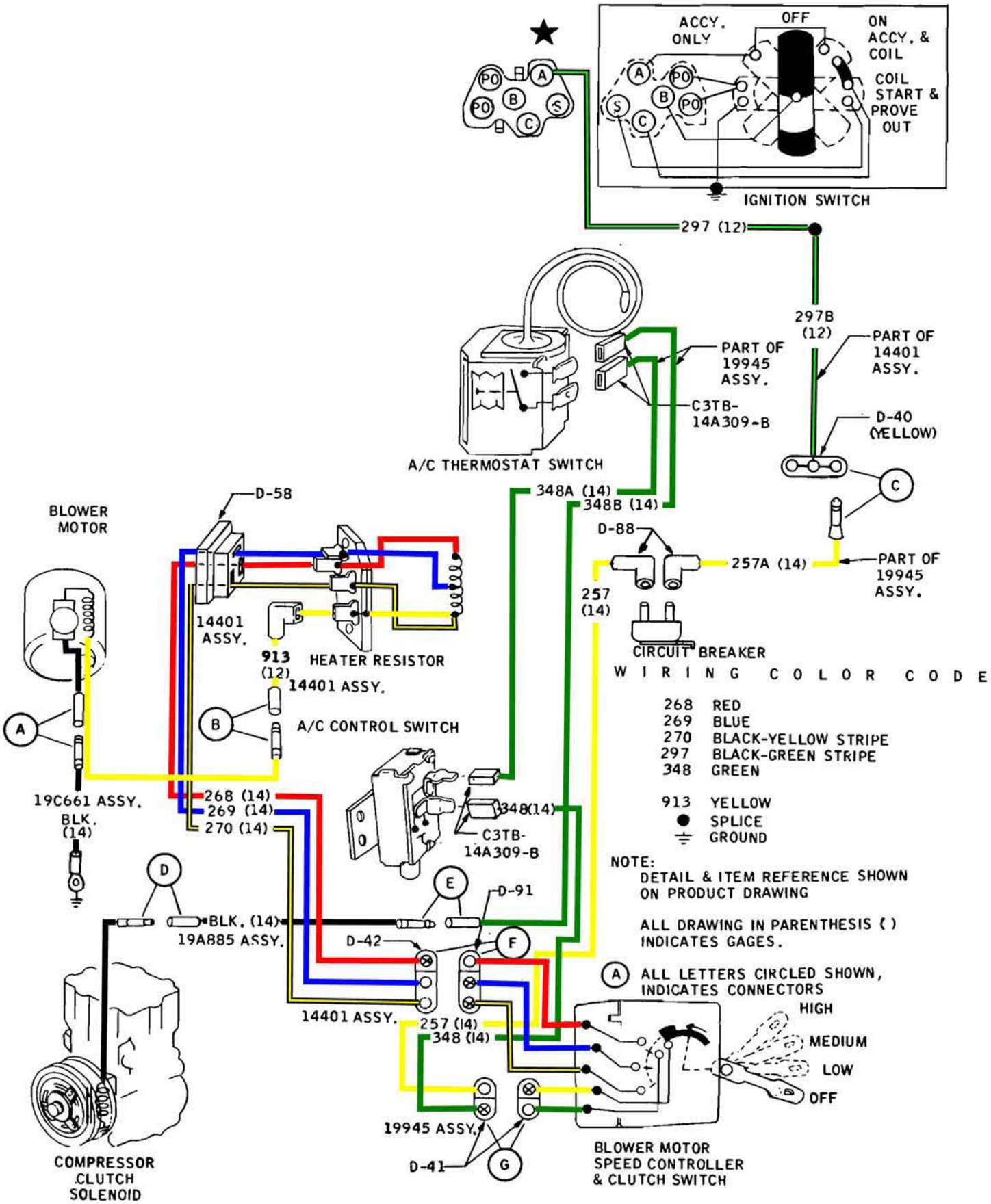
ACCY. ONLY
OFF
ON ACCY. & COIL
COIL START & PROVE OUT
IGNITION SWITCH
297 (12)
297B (12)
PART OF 14401 ASSY.
PART OF 19945 ASSY.
C3TB-14A309-B
D-40 (YELLOW)
A/C THERMOSTAT SWITCH
348A (14)
348B (14)
D-88
257A (14)
257 (14)
CIRCUIT BREAKER
BLOWER MOTOR
D-58
14401 ASSY.
913 (12)
HEATER RESISTOR
14401 ASSY.
A/C CONTROL SWITCH
19C661 ASSY.
BLK. (14)
268 (14)
269 (14)
270 (14)
348(14)
C3TB-14A309-B
D-91
BLK. (14)
19A885 ASSY.
D-42
14401 ASSY.
257 (14)
348 (14)
19945 ASSY.
D-41
COMPRESSOR CLUTCH SOLENOID
BLOWER MOTOR SPEED CONTROLLER & CLUTCH SWITCH
HIGH
MEDIUM
LOW
OFF
WIRING COLOR CODE
268 RED
269 BLUE
270 BLACK-YELLOW STRIPE
297 BLACK-GREEN STRIPE
348 GREEN
913 YELLOW
SPLICE
GROUND
NOTE:
DETAIL & ITEM REFERENCE SHOWN ON PRODUCT DRAWING
ALL DRAWING IN PARENTHESIS ( ) INDICATES GAGES.
A ALL LETTERS CIRCLED SHOWN, INDICATES CONNECTORS

1968 MUSTANG ELECTRICAL DRAWINGS

INDEX

AIR CONDITIONER E11
CHARGING ..... E4 & E5
CIGAR LIGHTER E8
CLOCK E3
CONVENIENCE SYSTEMS E19
CONVERTIBLE TOP E13
DEFOGGER E12
EXTERIOR LIGHTS ..... E6 & E7
GAUGES E3
HEATER AND DEFROSTER E10
HORNS E6
IGNITION ..... E4 & E5
INSTRUMENT CLUSTER ..... E2 & E3
INSTRUMENT PANEL E2
INTERIOR LIGHTS E8
NEUTRAL SWITCH E20
RADIO ..... E14 & E15
SPEED CONTROL ..... E16 & E17
STARTING ..... E4 & E5
STEREO TAPE ..... E14 & E15
TILT WHEEL E18
TURN SIGNALS ..... E6 & E7
WINDSHIELD WIPERS AND WASHERS E9